PCS-CONSULT LTD

Review of the Thiacloprid rodent carcinogenicity studies regarding increased incidences of tumours in the female genital tract

[redacted] DVM, PhD, ERT, FIATP

March 2014

Signature page

[S i g n e d]

March 20, 2014

[redacted] DVM, PhD, ERT, FIATP

Date

Review of the rodent carcinogenicity studies with Thiacloprid

Introduction

Thiacloprid is an established chloronicotinyl insecticide which interacts with the insect nicotinic acetylcholine receptors. It has been submitted for consideration of RAC in 2013. Recently a CLH report was issued in December 2013 by the UK Authorities. This report is open for comment. Bayer Crop Sciences asked the author of this review to evaluate the data in the carcinogenicity study reports independently and comment on the proposed classification and labelling as Carc. Cat.3; R40 / Carc. 2; H351.

Reports and documents reviewed

The following reports and documents were examined

- CLH report – Proposal for harmonised classification and labelling of Thiacloprid. UK Competent Authority, Chemical Regulation Directorate, Health and Safety Executive, United Kingdom
- [redacted] 1998, YRC 2894 - Combined chronic toxicity/carcinogenicity in Wistar rats (dietary administration over 2 years)
- [redacted] 1998, YRC 2894 – Oncogenicity study in B6C3F1-mice (administration in the food over 2 years)
- Access was given to a list of additional study reports listed in appendix 1

Results

The rat combined chronic toxicity and carcinogenicity study in Wistar rats ([redacted] 1998, M-003817-02-1) identified an increased incidence of uterine carcinomas in the two high dose groups.

Incidence of uterine tumours

Dose (ppm)		0	25	50	500	1000	0	25	50	500	1000
		male					female				
UTERUS	n						50	50	50	50	50
stromal polyp (b)							11	11	11	7	9
glandular polyp (b)								1			1
adenoma (b)									1	1	2
adenocarcinoma (m)							6	3	3	14	18
squamous cell carcinoma (m)							2			1	
mixed Muellerian tumor (m)										1	1
adenosquamous carcinoma (m)										1	2
stromal sarcoma (m)							1	1	1		
schwannoma (m)									2		
granular cell tumor (b)											1

Incidence of pituitary and mammary tumours – showing reduced incidence of pituitary tumours and mammary tumours in high dose females. The mammary gland also had a reduced secretory activity in the high dose groups with a reduction in galactoceles and lacteal cysts.

MAMMARY GLAND	n	50	50	50	50	50	50	50	50	50	50
fibroadenoma (b)			1				7	7	4	6	3
adenocarcinoma (m)							2	1	1		2
adenoma (b)							1		1	1	1

MAMMARY GLAND	50	50	50	50	50	50	50	50	50	50
lacteal cyst/s	1	3	4	1	1	18	15	10	12	6
galactocele	0	0	0	0	0	3	3	4	2	0

PITUITARY GLAND	n	50	50	50	50	50	50	50	50	50	50
pars distalis adenoma (b)		7	12	11	7	14	19	17	18	18	14
pars intermedia adenoma (b)			1		2						
pars distalis carcinoma (m)									1		

There was a marginal increased incidence of ovarian cysts present in the high dose groups.

OVARIES	n		50	49	50	48	50
cyst/s			16	15	19	22	24

In the kidney there was a dose related lower incidence and severity of chronic progressive nephropathy (CPN) in the high dose groups.

In the kidneys of females, the incidence and severity of chronic progressive nephropathy was reduced at 500 ppm and above.

DOSE GROUP		01	02	03	04	05
KIDNEYS/FEMALE	# EXAM :	50	50	50	50	50
- CHRON.PROG.NEPHROP.	GR : 1	20	19	17	19	9
- CHRON.PROG.NEPHROP.	GR : 2	8	9	15	3	2
- CHRON.PROG.NEPHROP.	GR : 3	3	4	2	1	1
- CHRON.PROG.NEPHROP.	GR : 4	1	0	1	2	0
- CHRON.PROG.NEPHROP.	GR : 5	1	0	0	0	0
- CHRON.PROG.NEPHROP.	TOTAL	33	32	35	25	12

In addition, there was an effect on the thyroid gland with an increased incidence of follicular hyperplasia in both sexes and follicular adenomas (in males only).

The thyroid gland exhibited a dose-related increase of follicular cell hypertrophy, in males starting at 50 ppm and in females starting at 500 ppm. Colloid alteration and pigment in the follicular epithelium were significantly increased in both sexes at 500 ppm and above. An increased incidence of follicular cell hyperplasias and adenomas was seen in males at 500 ppm and above. In females, the incidence of follicular cell adenoma appeared to be slightly elevated and follicular cell hyperplasia was significantly increased at 1000 ppm.

DOSE GROUP		01	02	03	04	05
THYROID GLAND/MALE	# EXAM :	50	50	50	50	49
- FOLL.C.HYPERPLASIA		1	2	2	6	3
- ADENOMA/FOLL.CELL **		0	0	1	5*	8**
- HYPERTR.FOLL.EPITH.**		12	10	22*	27**	34**
- COLLOID ALTERATION **		17	16	21	37**	41**
- PIGMENT **		16	11	23	30**	32**
THYROID GLAND/FEMALE	# EXAM :	50	50	50	50	48
- FOLL.C.HYPERPLASIA *		0	0	1	1	3*
- ADENOMA/FOLL.CELL		0	1	1	1	2
- HYPERTR.FOLL.EPITH. **		6	2	6	16**	23**
- COLLOID ALTERATION **		6	2	5	17**	28**
- PIGMENT **		0	0	2	4*	4*

The incidence of focal C-cell hyperplasias was reduced in females of the two highest dose groups (incidence K0 incl.+: 10 - 11 - 9 - 7 - 5). C-cell adenomas were reduced in females at 1000 ppm (incidence K0 incl. +: 7 - 6 - 5 - 7 - 3).

The effects on the thyroid gland were correlated with the Cyp450 induction and effects on thyroxine metabolism. This is a well-known mechanism of action and is considered of little relevance for humans (Alison et al, 1994).

The study also showed a marked reduction in body weight in the two high dose groups in female rats, reaching up to ca. -15% in comparison to controls after 500 ppm and up to -21% after 1000 ppm.

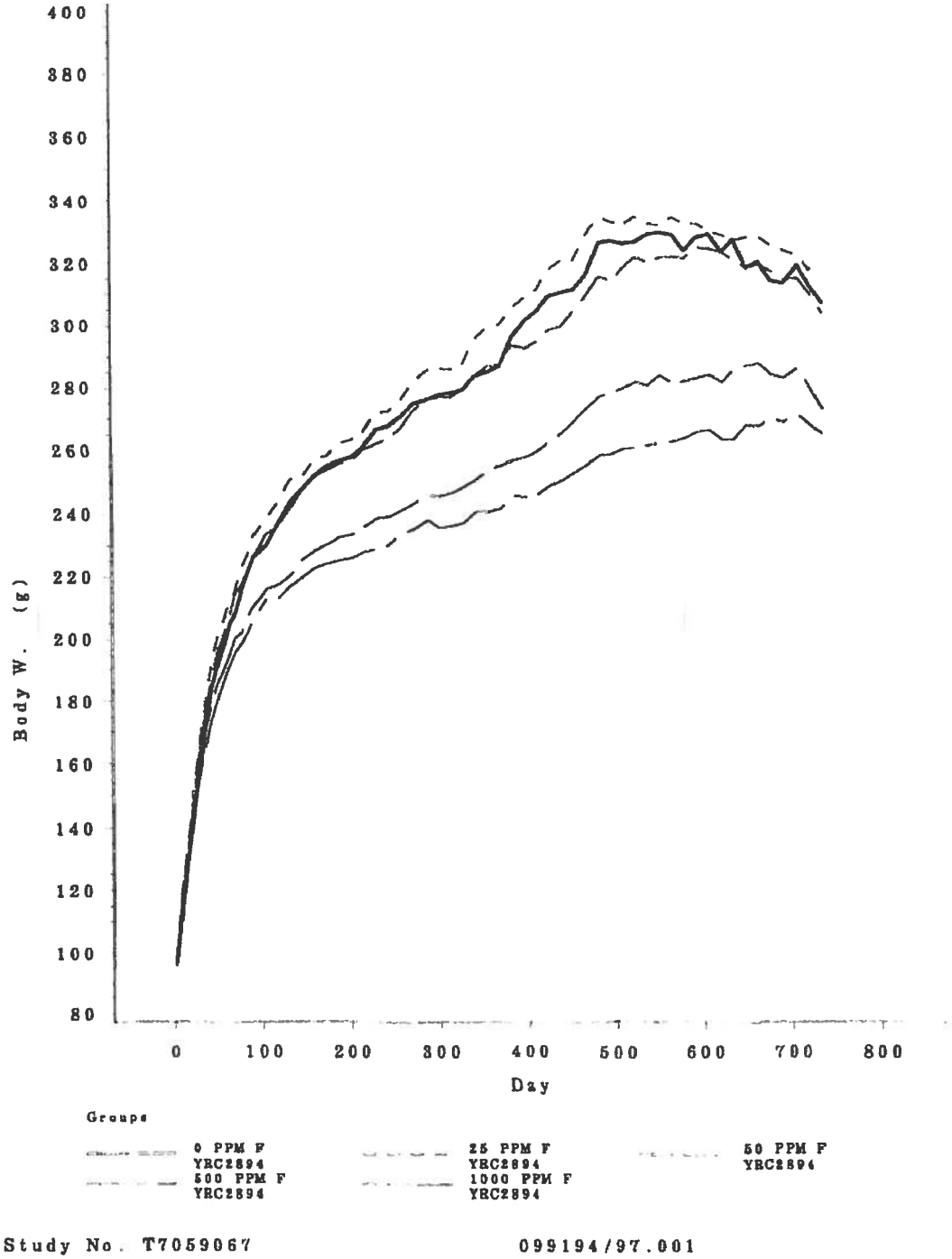

Discussion

The evaluation of carcinogenicity data generally uses a weight of evidence approach based on the holistic view of the available data to evaluate the relevance of the findings to man (Cohen et al, 2004).

The results of the rat carcinogenicity study by [redacted] (1998, M-003817-02-1) are indicative, that in this study at the two high dose groups, there was a reduced sustained prolactin secretion compared to controls especially at the highest dose group. Concomitantly there was a slight reduction in mammary tumours, mammary secretory activity and an increased incidence of uterine tumours. The kidney had a lower incidence and severity of chronic progressive nephropathy in the high dose groups. The pattern of response is very typical for reduced sustained prolactin levels and is seen with e.g. Bromocriptine (dopamine agonist) as well as with restricted diet studies (Griffith, 1977; Roe et al, 1995; Keenan et al, 2005a and b; Harleman et al., 2012; Ettlin et al, 2013). The cause of this sustained reduced prolactin secretion was likely due to, or contributed by, the marked reduced body weight gain. Studies with food restriction in rats showed that marked reduced body weight gain will affect the tumour incidence patterns similar to those observed in the carcinogenicity study with Thiacloprid. In this study there was a marked reduction in body weight gain and in the range of that observed in food restriction studies i.e. -20% (Roe et al, 1995).

Individual animal data emphasize the proposed mechanism of action as the likely cause for the increased incidence of uterine adenocarcinomas. If one examines the co-incidence of tumours, most animals with uterine adenocarcinomas did not have a mammary tumour (Harleman et al, 2012). It is not surprising that there is not a complete correlation between these findings as tumourgenesis is a complex multifactorial process.

The mechanism of action for sustained reduced levels of prolactin leading to the above change in tumour patterns with increased incidences of uterine tumours is not relevant to man (Ben-Jonathan et al, 2008, Hargreaves and Harleman, 2011). It is due to a rodent specific luteotrophic action of prolactin, which is not present in primates (Neumann,1991, see fig 1). Sustained reduced levels of prolactin will result in rats in a relative unopposed endogenous estrogen effect on the uterus (a recognised promotor) due to an increased estrogen/progesterone ratio as well as longer cyclicity leading to a longer stimulation of the uterus by physiological levels of estrogens (Ettlin et al, 2013). The sustained reduced levels of prolactin also will create a rat specific permissive environment for stimulatory effects on the uterine mucosa.

Fig 1- Hormonal regulation of the female reproductive tract in the female rat and effects on other organs (modified from Neumann, 1991)

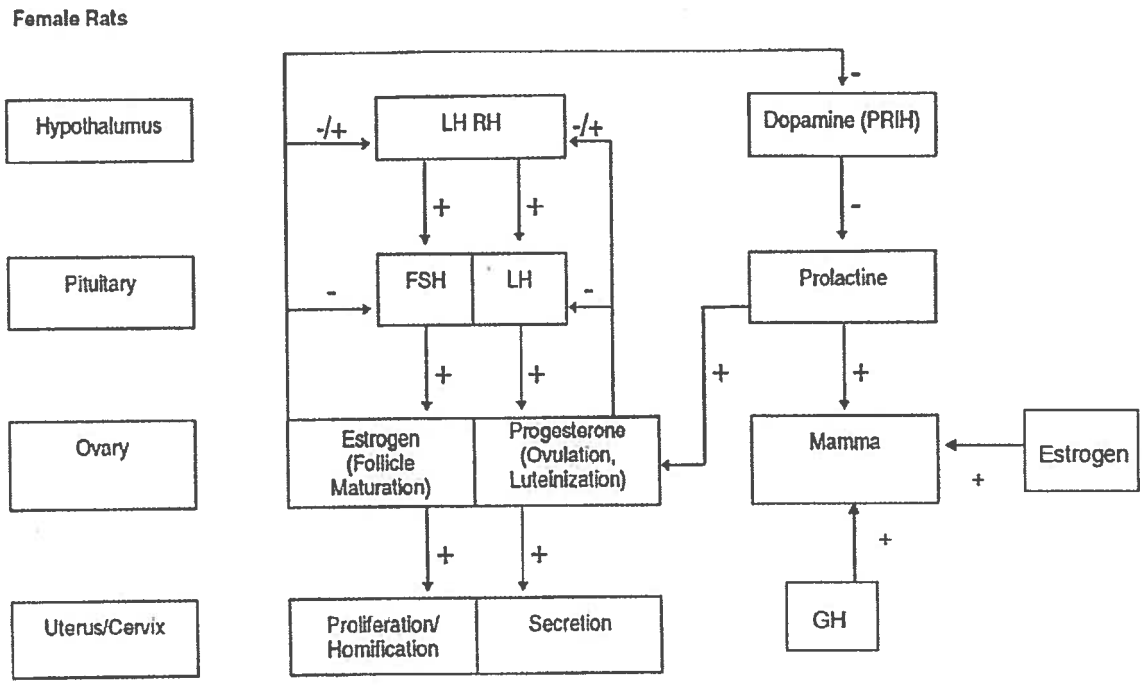

The carcinogenicity study and other repeat dose toxicity studies conducted with Thiacloprid do not have changes compatible with an exogenous estrogenic effect such as an increased cornification of the vagina or cycle changes. The juvenile rat study also excludes a direct estrogenic effect ([redacted]2007, M-293209-01-1).

One mechanistic study actually measured prolactin in treated and control animals ([redacted] 1998, M-004253-01-1). The study was conducted in cycling animals, pregnant rats on gestation Day 18 and in female rats on lactation day 2. The results do indicate that reduction of prolactin is observed after treatment in all three different conditions. In cycling rats the mean prolactin levels were 10.1 (ng/mL serum) with a SE of 3.32. Treated (800ppm) cycling females had a mean prolactin level of 7.2 with a SE of 2.16. Pregnant control females had prolactin levels of 26.2 with a SE of 4.52, whilst treated pregnant females had a prolactin level of 22.1 with a SE of 6.39. Lactating animals had a mean prolactin level of 36.9 with a SE of 6.28 whilst treated lactating rats had a mean prolactin serum level of 27.2 with a SE of 4.10. (The individual data are listed in appendix 2). In the study report the data were not further discussed.

The design of the experiment was less than optimal in that the animals were not cannulated (stress free collection) and blood collection was a single time point, hence the wide individual variation. This study and other hormonal examinations did not use cannulated animals and did not measure a time course during the estrous cycle. Hormone levels including prolactin change markedly during cycling and secretion can be pulsatile. (Ben-Jonathan, 2008). Measurements e.g. in diestrus are likely not to be the most sensitive time period for these

measurements, as also outlined in the comments of the EPA ([redacted] 2010). Nevertheless the fact remains though that there was a consistent tendency towards reduction in prolactin levels after treatment, which fully supports the toxicity profile seen in rats.

A study, which could give some indication, if other direct effects may be present on prolactin secretion, is outlined in the publication by Brott et al, 2012 using an ovariectomised rat model. The use of this model may indicate, if we are dealing with an indirect effect due to markedly reduced body weight gain, or if there is an additional mechanism present for the reduced sustained prolactin levels. If a no effect is seen after acute administration, one may consider a second experiment after repeat administration as Thiacloprid was shown to be an enzyme inducer.

In addition one could also examine Thiacloprid (and possibly major metabolites) in receptor binding studies as is frequently done with pharmaceuticals. These should include known pathways which affect dopamine as this is the prime controlling hormone for prolactin secretion, as well as e.g. sex hormone receptors, dopamine transporters, dopamine receptors, serotonin antagonists, cholinergic agents, antipsychotic receptors, antidepressant, and receptors for various recreational drugs (Hargreaves and Harleman, 2011).

Attention should also be given to effects on the opiate receptors as they are important in controlling prolactin in pregnancy and might provide an explanation for the observed dystocias in the reprotox studies. However the CLH report agrees that dystocias are of little relevance to man as the mechanisms controlling parturition in man and rat are vastly different.

Another study to be considered is the further examination of the pituitary tissues and adenomas for prolactin. The reduction in pituitary tumours was moderate. This could also been caused by the development of some TSH positive nodules, as the high dose groups had an effect on the thyroid. The mechanism of action for the thyroid would imply that elevated levels of TSH were present. Chronic stimulation may also lead to effects on the pituitary. A possible caveat here is the age of the tissue with prolonged formaldehyde fixation, which could affect stainability. Fortunately the normal tissue present can serve as an internal control for stainability.

The proposed studies can be conducted in a tiered approach with the ovarioectomized, double-cannulated rat model and binding studies as an early priority.

It is equivocal if the small effects on steroidogenesis as proposed by the company are significant enough to have caused this shift in tumour pattern. The mode of action proposed by the company suggests that this P450 induction and effects on steroidgenesis are responsible for the observed findings. This mode of action has been disputed as key by the EPA ([redacted]2010c, M-362441-01-1). They might have an additional effect because of the sensitive environment induced by the reduction in prolactin. As the CYP induction in rodents is generally not seen in the same extend in humans, this mechanism of action would be considered potentially partially rodent specific.

The slight increase in ovarian cysts may well be a reflection of the increased ratio of estrogen and progesterone (estrogen dominance) present in the high dose animals. This finding is also fully compatible with the tumour pattern change induced by Bromocriptine. Prolonged treatment in rats with Bromocriptine also produced increased number of ovarian cysts in rats (Richardson et al, 1984). The latter is therefore to be expected in case of a reduction in prolactin secretion. A direct estrogenic effect can be excluded because of the

negative results in the juvenile rat uterotrophic study and the absence of increased keratinisation in the female genital tract.

The vaginal morphology in the mechanistic study in 37 week old rats ([redacted]2009e, M-359926-01-1) did show a pattern of response which is fully compatible with a reduction of prolactin secretion. It can be assumed that these older animals will have a higher background of pituitary hyperplasia and adenomas resulting in increased prolactin levels (Molon-Noblot et al, 2003). (These were not measured in the hormonal assessment). Upon treatment the vaginal morphology had a markedly reduced incidence of mucification compared to controls. The animals also had a significantly increased estrogen/progesterone ratio. Both findings are pathognomonic for reduction of prolactin levels. The controls had a higher incidence of mucification in the vagina. The finding in control older animals with high prolactin levels mimicks a type III endocrine disruptor response and is also seen with prolactin mimetics. The marked effect of 28 day treatment in these older animals might suggest that there could be an additional MoA present in addition to body weight reduction.

Another study which might be considered for the elucidation of the mode of action is a repeat type study in canulated young and especially older rats, in which sex-hormone profiles, prolactin is measured and correlated to estrus cycle. The latter correlation is important as these hormones tend to change dramatically during the regular cycle. Canulation is important as it allows frequent stress free sampling.

The significance of finding of a low increase in luteomas in the high and mid dose group in mice ([redacted] 1998, M-003819-02-1) for human is unclear, but may also be linked to prolactin. In rats, but not reported in mice, Bromocriptine and Lergotril, both of which lower circulating prolactin concentrations, also cause persistence of corpora lutea (Heuson et al, 1970; Gopinath et al, 1987).

OVARIES				
No. examined	47	48	49	47
luteoma (b)	0	1	5	5
luteoma, (m)	0	0	0	1
cystadenoma (b)	4	1	1	4

In older mice one often sees retained individual persistent corpora lutea. The diagnosis between a large corpus luteum and luteoma in the absence of structural changes is difficult. The differentiation criteria for classification are arbitrary and based on size criteria (Mohr, 1997). It could be considered to have a PWG (pathology working group) to re-evaluate these per definition benign lesions. The malignant luteoma would be likely classified as a malignant granulosa cell tumour with luteinisation, as luteomas are per definition benign. An additional study may also be the hormonal profiling after treatment in young and aged mice similar to the proposed study in rats.

Overall the weight of evidence analysis for the uterine tumours in rats indicate that these are likely linked to the marked reduced sustained prolactin levels present in the study based on

the tumour incidence pattern, reduction in incidence and severity of chronic progressive nephropathy, and increased ovarian cysts, as well as vaginal morphology in older rats after treatment, which are pathognomonic for such an effect. One study also showed a consistent reduction in prolactin values after treatment in cycling, pregnant and lactating animals. This demonstrates that the toxicity profile seen in rats is indicative of a sustained reduction in prolactin level. This mechanism of action of uterine tumour induction is rat specific and not relevant for man as prolactin is not luteotrophic in man. Chronic treatment with Bromocriptine did not have a uterine tumour signal in man (Weil, 1986).

Risk assessment and labelling

The scientific grounds and conclusions for the proposed classification and labelling as Carc. Cat.3; R40 / Carc. 2; H351 are based on the increased uterine tumours in the rat and increased ovarian tumours in the mouse. The assumption was that the mechanism of action is hormonal and possibly relevant for human (CLH report Thiacloprid, 2013). The above analysis of the carcinogenicity study and data in the rat shows that based on the weight of evidence the increased incidence of uterine tumours is linked to a decreased sustained prolactin secretion. This MoA is generally considered not relevant to humans (Harleman et al. 2013; Alison 1994). So just like the observed thyroid tumours there is no labelling required for these tumours as a relevance for humans is not given. Also the slight increase of luteoma in the mouse may well have a similar pathogenesis. The MoA is also clearly non-genotoxic. The latter allows for the assumption of NOEL and safety margins. Both carcinogenicity studies have a clear no effect level. Based on the current ADI of 0.01 mg/kg, this gives an adequate safety margin to these effects, especially when the likely mechanism of action is totally irrelevant for man (EFSA, 2013). Both rodent species have sufficient disparity in the hormonal control mechanism in comparison to humans so that extrapolation to humans is not warranted. Hence a proposed classification and labelling as Carc. Cat.3; R40 / Carc. 2; H351 for Thiacloprid is not considered necessary based on the data for a MoA which is not relevant to humans of a non genotoxic compound. It is reasonable to assume that exposure to humans does not have a carcinogenic risk based on the current data.

References

Alison RH, Capen CC, Prentice DE (1994) Neoplastic lesions of questionable significance to humans Toxicol Pathol 31, 310-320

Ben-Jonathan N, LaPensee CR, LaPensee EW (2008): What we learn from rodents about prolactin in human? Endocr Rev 29, 1 - 41.

Brott DA, Werkheiser JL, Campbell P, Bentley P, Andersson H, Stewart J, et al.(2012): Inhibition of oestradiol-induced prolactin release in a dual-cannulated ovariectomized rat model by carmoxirole, a peripherally-restricted dopamine agonist. Basic Clin Pharmacol Toxicol 111, 411 - 416.

Cohen SM, Klaunig J, Meek ME, Hill RN, Pastoor T, Lehman-McKeeman L, et al. (2004): Evaluating the human relevance of chemically induced animal tumors. Toxicol Sci 78, 181 - 186.

European Food Safety Authority (2013) Reasoned opinion on the modification of the existing MRLs for thiacloprid in spinach and similar leaves. EFSA Journal 2013; 11 (9):3382.

Ettlin RA, Junker U, Prentice DE (2013): Dopamine agonists. In: Classic Examples in Toxicologic Pathology, European Society of Toxicologic Pathology, eds. W. Drommer, E. Karbe, P.-G. Germann, G. Morawietz, R. Kellner. CD ROM, ISBN 3-9522681-2-7.

Gopinath C, Prentice DE, Lewis DJ (1987) Atlas of experimental toxicologic pathology. MTP Press Norwell USA pp 91-103.

Griffith RW (1977): Bromocriptine and uterine neoplasia. Br Med J 2:1605.

Hargreaves A, Harleman J (2011): Preclinical risk assessment of drug-induced hypo- and hyperprolactinemia. J Appl Toxicol 31, 599 - 607.

Heuson JC, Waelbroeck-Van Graver C, Legros N (1970) Growth inhibition of rat mammary carcinoma and endocrine changes produced by 2-Br-α-ergocriptine, a suppressor of lactation and nidation. Eur J Cancer 6, 353-356.

Harleman JH, Hargreaves A, Andersson H, Kirk S (2012): Incidence and co-incidence of uterine and mammary tumours in Wistar and Sprague-Dawley rats based on the RITA Database and the role of prolactin. Toxicol Pathol 40, 926 - 930.

Keenan KP, Soper KA, Hertzog PR, Gumprecht LA, Smith PF, Mattson BA, Ballam GC, Clark RL. 1995a. Diet, overfeeding, and moderate dietary restriction in control Sprague-Dawley rats: II. Effects on age-related proliferative and degenerative lesions. Toxicol.Pathol. 23, 287-302.

Keenan KP, Soper KA, Smith PF, Ballam GC, Clark RL. 1995b. Diet, overfeeding, and moderate dietary restriction in control Sprague-Dawley rats: I. Effects on spontaneous neoplasms. Toxicol.Pathol. 23, 269-286.

Mohr U (1997). International classification of rodent tumours. Female genital system. Alison R, Ettlin RA, Foley GL, Harleman JH, Maekawa A, McConnell RF, Qureshi SR, Rehm S, Reznik G, Valerio M. International Agency for Research on Cancer.pp22-23.

Molon-Noblot S, Laroque P, Coleman JB, Hoe CM, Keenan KP (2003). The effects of ad libitum overfeeding and moderate and marked dietary restriction on age related spontaneous pituitary gland pathology in Sprague-Dawley rats. Toxicol Pathol. 31, 310-320.

Neumann F (1991): Early indicators for carcinogenesis in sex-hormone-sensitive organs. Mutat Res 248, 341 - 356.

Roe FJ, Lee PN, Conybeare G, Kelly D, Matter B, Prentice D, Tobin G. (1995): The Biosure Study: influence of composition of diet and food consumption on longevity, degenerative diseases and neoplasia in Wistar rats studied for up to 30 months post weaning. Food ChemToxico 33 Suppl 11S - 100S.

Richardson BP, Turkali, I, Fluckigen E (1984). Bromocriptine. In: Laurence DR, McLean AEM, Weatherall M eds Safety testing of new drugs pp19-63. Academic Press London

[redacted] (2010). Thiacloprid Mode of actions investigations to explain rat uterine adenocarcinomas. M-362441-01-1

Weil C (1986): The safety of bromocriptine in long-term use: a review of the literature. Curr Med Res Opin 10, 25 – 51.

Appendix 1

Thiacloprid studies and position papers for J. Harleman

Repeated dose toxicity studies including chronic/carcinogenicity studies in rat and mouse

Annex Point	Author / Year	Report / Document No.	Study / Position paper	Comment
KIIA 5.3.1	[redacted] 1995a	23861 / M-000703-01-4	YRC 2894 - Pilot toxicity study on rats - acute oral toxicity to non-fasted animals - subacute oral toxicity with gavage administration over 2 weeks	Study Report
KIIA 5.3.1	[redacted] 1996c, revised 1999	25720 / M-000785-02-1	YRC 2894 - Study for subacute oral toxicity in rats (feeding study over 2 weeks)	Study Report
KIIA 5.3.1	[redacted] 2000	29674 / M-030427-03-1	YRC 2894 (c.n.: Thiacloprid) - Special study for subacute oral toxicity in rats (feeding study for 3 weeks)	Study Report
KIIA 5.3.1	[redacted] 1994	23450 / M-000688-01-1	YRC 2894 - Pilot study on subacute toxicity in B6C3F1 mice (administration in feed over 3 weeks)	Study Report
KIIA 5.3.1	[redacted] 1997a	26017 / M-000821-01-1	YRC 2894 - Study for subacute oral toxicity in mice (feeding study over 2 weeks)	Study Report
KIIA 5.3.2	[redacted] 1997	26239 / M-000863-01-1	YRC 2894 - Investigations of subchronic toxicity in Wistar rats (feeding study over 12 weeks with a subsequent recovery period over 5 weeks)	Study Report
KIIA 5.3.2	[redacted] 1995	23834 / M-000697-02-1	YRC 2894 - Subchronic range-finding study for a two-year study in B6C3F1 mice (administration in feed over about 14 weeks)	Study Report
KIIA 5.8.2	[redacted] 1998	27716 / M-003764-01-1	YRC 2894 - Mechanistic study on aromatase induction in mice (Feeding study for 13 weeks)	Study Report

KIIA 5.5	**[redacted] 1998**	**27480 / M-003817-02-1**	**YRC 2894 - Combined chronic toxicity/carcinogenicity study in Wistar rats (dietary administration over 2 years)**	**Study Report**
KIIA 5.5	**[redacted] 1998**	**27247 / M-003819-02-1**	**YRC 2894 - Oncogenicity study in B6C3F1-mice (administration in the food over 2 years)**	**Study Report**

Most recent work on the MOA of uterine adenocarcinoma in rat

Annex Point	Author / Year	Report No.	Study	Comment
KIIA 5.8.2 (d)	[redacted] 2007	SA 06252 / M-293209-01-1	Thiacloprid - Evaluation in the immature rat - Uterotrophic assay	Study Report
KIIA 5.8.2 (d/f)	[redacted] 2009c	SA 07125 / M-359235-01-1	Thiacloprid - Investigation of effects on hormone levels in adult female wistar rats following a single oral dose	Study Report
KIIA 5.8.2 (d/f)	[redacted] 2009b	SA 07011 / M-360362-01-1	Thiacloprid - Evaluation of hormone levels in female rats 2 and 8 hours after 4 days exposure by oral gavage	Study Report
KIIA 5.8.2 (d/f)	[redacted] 2009a	SA 07010 / M-360349-01-1	Thiacloprid - Evaluation of hormone levels in female rats 24 hours after 4 days exposure by oral gavage	Study Report
KIIA 5.8.2 (d/f)	[redacted] 2009d	SA 08054 / M-360757-02-1	Thiacloprid - Exploratory 28-day toxicity study in the rat by dietary administration	Study Report
KIIA 5.8.2 (d/f)	[redacted] 2009e	SA 08327 / M-359926-01-1	Thiacloprid - Exploratory 28-day toxicity study in the aged female rat by dietary administration	Study Report
KIIA 5.8.2 (d/f)	[redacted] 2010a	SA 08351 / M-361492-01-1	Thiacloprid: Investigation of in vitro effects on steroidogenesis using H295R cells	Study Report
KIIA 5.8.2 (d/f)	[redacted] 2010b	SA 09062 / M-361609-01-1	Thiacloprid: In vitro investigation of steroid sex hormone secretion in rat ovarian preantral follicles	Study Report
KIIA 5.8.2 (d/f)	[redacted] **2010c**	**HT012010 / M-362441-01-1**	**Thiacloprid - Mode of action (MOA) investigations to explain rat uterine adenocarcinomas**	**Position paper**

Information on Dystocia

Annex Point	Author / Year	Report No.	Study	Comment
	[redacted] 2007	**M-293264-01-1**	**Thiacloprid - Dystocia in rats and its possible impact on human parturition**	**Position paper**
KIIA 5.6.1	[redacted] 1995	24084 (107043)/ M-000911-01-1	A two-generation reproduction range-finding study with YRC 2894 technical in rats	Study Report
KIIA 5.6.1	[redacted] 1997	BC8385 (107628) / M-001304-01-1	A two-generation dietary reproduction study in rats using technical YRC 2894	Study Report
KIIA 5.8.2	[redacted] 1998a	BC8489 (107641) / M-003820-01-1	A one-generation dietary reproduction study in rats using technical grade YRC 2894 to evaluate the reproducibility of Dystocia and an increase in stillbirths in the P generation of a two-generation dietary reproduction study in rats	Study Report
KIIA 5.8.2	[redacted] 1998b	BC 8605 (107766) / M-004291-01-1	An experimental study to investigate the cause of dystocia and stillbirths in rats treated with technical grade YRC 2894	Study Report
KIIA 5.8.2	[redacted] 1998c	BC 8481 (107640) / M-002127-01-1	A reproduction study in rats to determine if administration of technical YRC 2894 from gestation days 18 to 21 will cause dystocia (Study number II)	Study Report
KIIA 5.8.2	[redacted] 1998d, amended 2000	BC 8565 (107639) / M-016564-02-1	A reproduction study in rats to determine if administration of technical YRC 2894 from gestation days 18 to 21 will cause dystocia	Study Report
KIIA 5.8.2	[redacted] 1998	BC 8604 (108360) / M-004253-01-1	Further examination of the increased occurrence of dystocia and stillbirths observed in a reproductive bioassay with an experimental cyanamide (YRC 2894)	Study Report
KIIA 5.8.2	[redacted] 2011	SA 10007 / M-403763-01-1	Thiacloprid - A special one-generation dietary reproduction study in Sprague-Dawley rats	Study Report

TABLE 30

Individual Data Depicting the Effect of YRC 2894 on Circulating Prolactin in Cycling Rats[a]

Dose (ppm)	Animal Number	Prolactin (ng/mL serum)
0	KF0101	2.60
0	KF0107	3.00
0	KF0109	4.65
0	KF0113	1.35
0	KF0115	24.20
0	KF0118	12.60
0	KF0119	2.30
0	KF0120	46.80
0	KF0121	5.30
0	KF0122	3.35
0	KF0124	15.95
0	KF0126	10.30
0	KF0131	7.15
0	KF0133	1.75
0	KF0137	---[c]
	MEAN	10.09
	SE	3.32

Table 30 continued on following page

TABLE 30

Individual Data Depicting the Effect of YRC 2894 on Circulating Prolactin in Cycling Rats[a]

Dose (ppm)	Animal Number	Prolactin (ng/mL serum)
800	KF1101	3.90
800	KF1102	7.30
800	KF1103	---[b]
800	KF1106	10.75
800	KF1107	2.85
800	KF1110	24.85
800	KF1113	---[b]
800	KF1115	3.95
800	KF1116	---[b]
800	KF1120	1.75
800	KF1123	---[b]
800	KF1126	---[b]
800	KF1132	7.30
800	KF1136	7.20
800	KF1138	2.10
	MEAN	7.20
	SE	2.16

[a] Cycling female rats were dosed with YRC 2894 for 8 ± 1 weeks. The YRC 2894 was administered to the animals as an admix to the diet at a constant concentration of either 0 or 800 ppm. During the study, feed was available on a continuous basis for *ad libitum* consumption by the animals.

[b] "--" indicates insufficient sample for analysis

[c] "--" indicates sample result was outside of prolactin standard curve range

TABLE 31

Individual Data Depicting the Effect of YRC 2894 on Circulating Prolactin in Pregnant Rats at Gestation Day 18[a]

Dose (ppm)	Animal Number	Prolactin (ng/mL serum)
0	KF0103	47.90
0	KF0104	51.00
0	KF0106	5.10
0	KF0108	18.10
0	KF0111	15.20
0	KF0116	14.60
0	KF0123	25.20
0	KF0132	21.10
0	KF0142	---[b]
0	KF0147	35.00
0	KF0181	29.40
0	KF0183	6.80
0	KF0184	45.00
	MEAN	26.20
	SE	4.52

Table 31 continued on following page

TABLE 31

Individual Data Depicting the Effect of YRC 2894 on Circulating Prolactin in Pregnant Rats at Gestation Day 18[a]

Dose (ppm)	Animal Number	Prolactin (ng/mL serum)
800	KF1108	12.30
800	KF1111	30.50
800	KF1114	2.90
800	KF1118	9.90
800	KF1127	29.20
800	KF1134	60.40
800	KF1135	9.00
800	KF1156	39.20
800	KF1159	---[b]
800	KF1163	5.60
800	KF1165	---
	MEAN	22.11
	SE	6.39

[a] Cycling female rats were dosed continuously with YRC 2894 for 8 ± 1 weeks; the animals were mated and exposure to the chemical continued up through Day 18 of gestation. The YRC 2894 was administered to the animals as an admix to the diet, which was available for *ad libitum* consumption, at a constant concentration of either 0 or 800 ppm.

[b] "--" indicates sample result was outside of prolactin standard curve range

TABLE 32

Individual Data Depicting the Effect of YRC 2894 on Circulating Prolactin in Female Rats on Lactation Day 2[a]

Dose (ppm)	Animal Number	Prolactin (ng/mL serum)
0	KF0105	---[b]
0	KF0117	---[c]
0	KF0136	---[c]
0	KF0140	36.40
0	KF0148	---[c]
0	KF0151	22.90
0	KF0156	---[b]
0	KF0157	---[c]
0	KF0160	58.80
0	KF0171	39.70
0	KF0174	26.60
0	KF0178	---[c]
0	KF0180	---[b]
0	KF0182	---[c]
	MEAN	36.88
	SE	6.28

Table 32 continued on following page

TABLE 32

Individual Data Depicting the Effect of YRC 2894 on Circulating Prolactin in Female Rats on Lactation Day 2[a]

Dose (ppm)	Animal Number	Prolactin (ng/mL serum)
800	KF1105	30.30
800	KF1133	43.90
800	KF1143	24.70
800	KF1149	13.70
800	KF1150	27.80
800	KF1155	22.80
800	KF1169	---[c]
800	KF1171	ND[d]
800	KF1173	---[c]
800	KF1174	---[b]
800	KF1183	---[c]
800	KF1184	---[b]
	MEAN	27.20
	SE	4.10

[a] Cycling female rats were dosed continuously with YRC 2894 for 8 ± 1 weeks; the animals were mated and exposure to the chemical continued through preganancy and delivery, concluding at Day 2 of lactation. The YRC 2894 was administered to the animals as an admix to the diet, which was available for *ad libitum* consumption, at a constant concentration of either 0 or 800 ppm.

[b] "--" indicates insufficient sample for analysis

[c] "--" indicates sample result was outside of prolactin standard curve range

[d] ND = Not determined