The Use of Formaldehyde Releasing Biocides and Chemicals in the Oil and Gas Industry

Scavengers and Biocides

Outline of Presentation

- Applications in Oil and Gas Industry
- Economic Importance
- Use concentrations – formulated products
- Regulatory Framework - handling and exposure
  - BPR Evaluation
  - Safe use under REACh
  - Ospar criteria and implementation
  - Exposure Scenarios
- Possible alternatives and their problems
- Some Conclusions

Use of Formaldehyde Releasers in Oil and Gas Industry

- Two main applications
  - **Biocides** - minor use
    - Drilling, diesel preservative, crude oil treatment applications
    - Regulated under BPR (relevant PTs: 6, 11 and 12)
  - **Hydrogen Sulphide (H_2S) Scavengers** - major use
    - Applied to "sweeten" gas streams to meet export specification of < 3 ppm
    - Remove and reduce H_2S to "safe" levels for corrosion control and personnel safety
    - Regulated under REACh

Formaldehyde Releasing Chemicals

(Volumes used in the North Sea)

	Biocides	H_2S Scavengers
Norway	900	8400
Holland	100	3900
Denmark	300	22500
UK	600	4235
Total	1900	39035

The figures are for annual use as of end 2013.

The figures for Norway, Holland and Denmark are based on operator use.

The UK figures are verified from the DECC database.

Formaldehyde Releasing Chemicals

(Volumes used in UK-North Sea)

	Biocides	H_2S Scavengers
Drilling and Completion	250	135
Production	250	4000
Stimulation and workover	-	200
Other	100	-
TOTAL	600	4335

The main use of formaldehyde releasers is in production operations as a H_2S Scavenger.

Typical Offshore Delivery Tank

Tank Farm

Chemical Injection Control Panel

SEVAN VOYAGEUR
NASSAU

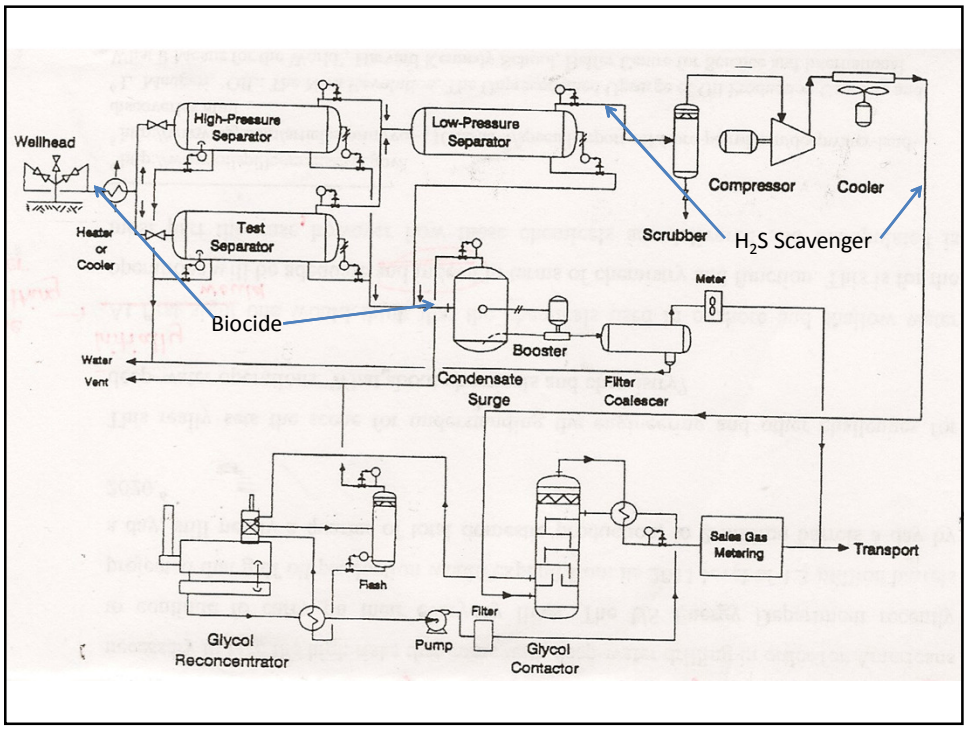
Wellhead
High-Pressure Separator
Low-Pressure Separator
Test Separator
Heater or Cooler
Compressor
Cooler
Scrubber
H_2S Scavenger
Biocide
Meter
Booster
Water
Vent
Condensate Surge
Filter Coalescer
Sales Gas Metering
Transport
Flash
Filter
Pump
Glycol Reconcentrator
Glycol Contactor

Hexahydro Triazine (HHT)

(Applications under REACh and BPR)

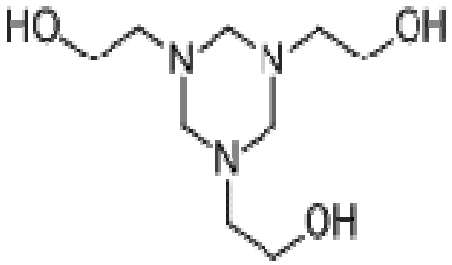

tris(hydroxyethyl)-s-triazine

Use Concentrations

(sulfide scavenging)

- Delivered as 40 % active product to oil and gas installations.
- Bunkered and delivered for use in gas process stream through hardline injection.
- Typical dose rate depends on volume of H_2S gas present, usually 10 kg of scavenger of every 1 kg of H_2S.

Benefits from H_2S Scavenging

- Removal of H_2S from gas streams and produced fluids is essential for the following:
  - Reducing the level of H_2S to acceptable export specification. Upstream processing plants will not accept higher than 3 ppm in gas.
  - H_2S is highly corrosive.
  - H_2S is acutely toxic.

Oxazolidine (MBO)

(Applications under BPR)

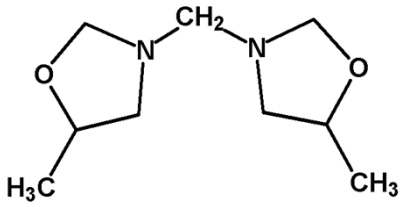

3,3'methylenebis[5-methyloxazolidine]

Use Concentrations

- Formulated and delivered at 25-30 % active product to oil and gas installations.
- Usually injected straight from delivery through flexible line to manifold chemical injection.
- Dose rate depends on treatment regimen and application, from 350 - 1000 ppm is typical.

Current Regulatory Registration

- All chemical products used offshore are registered under BPR or REACH.
- All chemicals are registered for offshore use through the relevant National Authority Scheme to implement the requirements of the OSPAR treaty and meet harmonised environmental (and health and safety) criteria.
- In the UK sector of North Sea, the Control of Substance Hazardous to Health Regulations (COSHH) apply.
- Other National authorities have similar legislation.

Chemical Hazard and Risk Management

- Regulator (Cefas on behalf of DECC) conducts a hazard assessment on all chemical products used offshore.
- Based on aquatic environmental impact data.
- Use of the CHARM model.
- Calculates a Hazard Quotient (HQ) value, based on the Predicted Effect Concentration against the No Effect Concentration.
- HQ is expressed as a colour banding which is published on the Cefas website.
- Other National Authorities have variations.

OCNS Hazard Quotient Colour Bands

Minimum HQ Value	Maximum HQ Value	HQ Colour Banding	Hazard Quotient
>0	<1	GOLD	Lowest Hazard
≥1	<30	SILVER	
≥30	<100	WHITE	
≥100	<300	BLUE	
≥300	<1000	ORANGE	
≥1000		PURPLE	Highest Hazard

Current Regulatory Registration- COSHH

- End users (Oil and Gas Operators) are required by statute to make a risk assessment of all hazardous substances.
- This assessment includes the potential for substitution to viable alternatives.
- Assessment of the exposure potential of hazardous substances including their components and reaction products.

Handling and Exposure

- All Oil and Gas operators in the North Sea region have in place policies and procedures to eliminate (and reduce where not possible) exposure of chemicals to personnel.
- Use of National Regulations (e.g. COSHH) and recognised standards of occupational hygiene are in place.
- Work place monitoring takes place regularly.

Handling and Exposure

- Generic Exposure studies have been conducted by suppliers and this continues.
- On site specific exposure studies have been conducted by operating companies
  - Formaldehyde, no level detected
  - HHT, not measurable – 1 ppb detected.

Possible Biocide Alternatives

- Glutaraldehyde (RAC Opinion)
  - Acute tox. 2 + 3
  - Respiratory sensitizer 1
  - Candidate for substitution
- Tetrakis(hydroxymethyl)phosphonium sulphate (MSDS of Supplier)
  - Reproduction Toxic 1B
  - Not classified as formaldehyd releaser but releasing formaldehyde
  - Candidate for Substitution (?)
- Acrolein (6th ATP)
  - Acute tox. (1, 2, 3)
  - Needs higher level of safety and security
  - Registered persons

Possible H_2S Scavenger Alternatives

- Reservoir Manipulation
  - Changing Sulphate Reducing Bacteria to Nitrate Reducing Bacteria
  - Can help but can still have H_2S generation
- Oxidising agents (e.g. Sodium Chlorite)
  - Very fast and complete scavenging
  - Highly corrosive
  - Severe handling and operational problems
- Amine scrubbing
  - Insufficient capacity offshore due to space constraints and engineering loads
- Acrolein (see biocide)

Some Conclusions

- Formaldehyde releasers have an important role in Oil & Gas industry especially in gas processing.
- Current processes are safe and pose no exposure threat to human health.
- Chemical alternatives with a better health & environmental profile are not currently available or practical for offshore use.

Many Thanks

www.hcoilchem.com